Instructions for use

HOME DELUXE
WIR MACHEN DEIN ZUHAUSE

VELARA upholstered bed

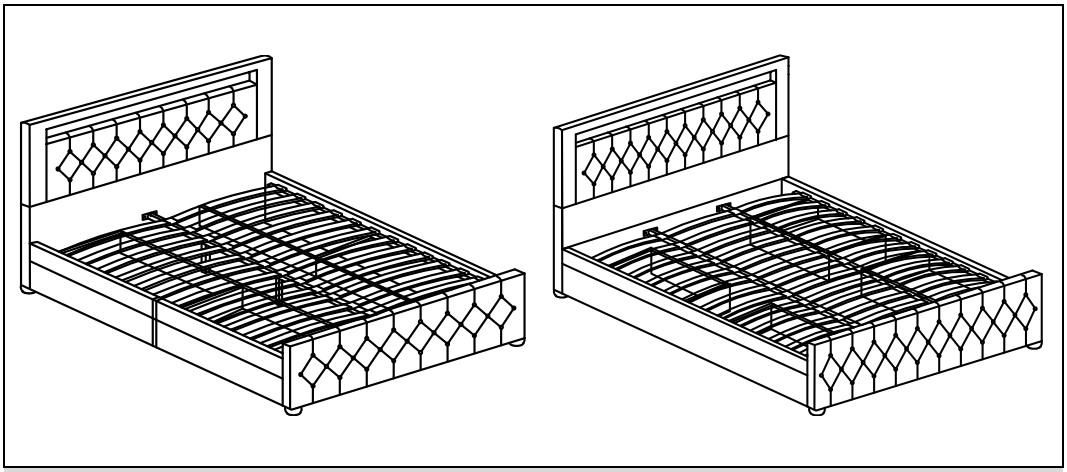

Original instructions for use

Designed in Germany

IMPORTANT:
KEEP FOR FUTURE REFERENCE.
READ CAREFULLY!

Table of contents

1. General information ... 3
1.1. Product overview ... 3
1.2. General notes ... 3
1.3. Warranty ... 3
2. Information on the instructions for use ... 4
2.1. Availability of the instructions for use ... 4
2.2. Target groups of the instructions for use ... 4
2.3. Information on the translation ... 4
2.4. Explanation of symbols ... 4
2.5. General information on the instructions for use ... 5
2.6. Intended use ... 5
2.7. General safety instructions ... 6
3. Product features ... 8
3.1. Technical data ... 8
4. Scope of delivery ... 8
5. Assembly ... 14
5.1. Safety instructions ... 14
5.2. Structure of the product ... 15
6. Application ... 23
6.1. Safety instructions ... 23
6.2. Initial commissioning ... 23
6.3. Operation ... 23
6.4. Control element ... 24
7. Troubleshooting ... 25
8. Maintenance and care ... 25
8.1. Safety instructions ... 25
9. Dismantling ... 25
9.1. Safety instructions ... 25

10. Waste disposal 26
10.1. Safety instructions 26
10.2. General information 26
Electrical and electronic equipment - Information for private households 27

Dear customer,

Thank you for choosing a product from **Home Deluxe GmbH**. We hope you enjoy your new VELARA upholstered bed.

The instructions for use support you during installation, commissioning, operation and maintenance of the product. The instructions for use and the safety instructions must be read carefully and in full. Observe these instructions to avoid danger.

1. General information

1.1. Product overview

Model: VELARA upholstered bed

140 x 200 cm dark gray	|	Item ID: 21910	|	Variant ID:54058
140 x 200 cm Beige	|	Item ID: 21910	|	Variant ID:54059
180 x 200 cm dark gray	|	Item ID: 21911	|	Variant ID:54063
180 x 200 cm Beige	|	Item ID: 21911	|	Variant ID:54064

Model: VELARA upholstered bed incl. mattress and topper

140 x 200 cm dark gray	|	Item ID: 21919	|	Variant ID:54105
140 x 200 cm Beige	|	Item ID: 21919	|	Variant ID:54106
180 x 200 cm dark gray	|	Item ID: 21920	|	Variant ID:54114
180 x 200 cm Beige	|	Item ID: 21920	|	Variant ID:54115

1.2. General notes

In order to meet our standards, we are constantly improving quality, simplifying installation and operation and adapting products to customer requirements. Due to these changes, the current version of the instructions for use can be found on our homepage.

The term "product" is used in the instructions for use for the "VELARA upholstered bed".

1.3. Warranty

The statutory liability for defects and warranty rights apply from the date of purchase.
Home Deluxe GmbH accepts no liability for damage caused by non-compliance with the instructions for use. Complaints arising from improper installation or use are excluded from the warranty. In the event of defects in the product, please contact our customer service in writing using the contact form on our homepage, stating the product name, serial number and a photo of the type plate:

Home Deluxe GmbH
Schanzeweg 2
32312 Lübbecke
Germany
Tel: +49 (0)5743 6181-0
www.home-deluxe-gmbh.de

If you have any further questions, please contact our customer service team using the contact form.

2. Information on the instructions for use

2.1. Availability of the instructions for use

The instructions for use are part of the product and should be kept complete and in the immediate vicinity of the product.

2.2. Target groups of the instructions for use

The instructions for use must be read and observed by every person involved in one of the following activities or uses:

- Unpacking
- Assembly / Installation
- Commissioning / Operation
- Maintenance / inspection / care
- Troubleshooting / repair
- Waste disposal

2.3. Information on the translation

The original instructions for use were written in German. Any other language available is a translation of the German version.

2.4. Explanation of symbols

Icon	Explanation of symbols
	**WARNING** The symbol indicates possible dangers that could result in fatal or serious injuries. Before carrying out the corresponding installation or application step, read the corresponding note.
	**INFO** The symbol provides important information and indicates material damage. Observe these before carrying out the corresponding installation or application step in order to understand problems and avoid damage.
	**CE marking** The symbol declares the conformity of the product with the applicable requirements of the European Community. The current declaration of conformity is available on request from Home Deluxe GmbH.
	**Use indoors only** The symbol indicates that the product may only be used indoors.
	**Read instructions for use** The symbol indicates that the operating instructions must be read carefully before mounting/installing and/or operating the appliance.
	**Disposal of batteries and rechargeable batteries** Batteries and rechargeable batteries must not be disposed of with household waste!

Icon	Explanation of symbols
	**Disposal of electrical and electronic appliances** Electrical and electronic appliances must not be disposed of with household waste!
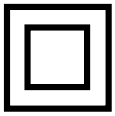	**Protection class II** The symbol indicates that the equipment has reinforced or double insulation to the level of the rated insulation voltage between active and touchable parts. They usually have no connection to the protective conductor.
	**Protection class III** The symbol indicates that the equipment is operated with safety extra-low voltage (SELV) or protective extra-low voltage (PELV). Equipment in protection class III may only be connected to SELV or PELV power sources.
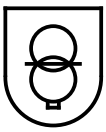	**Safety transformer** The symbol indicates that a short-circuit-proof closed safety transformer is installed.
	**Do not look directly into the light** The symbol indicates that you must not look directly into the light. The luminaire should be positioned so that prolonged staring into the luminaire at a distance of less than 0.219 m is not to be expected.

2.5. General information on the instructions for use

The instructions for use refer to the VELARA upholstered bed. It contains important information on assembly, operation, maintenance and cleaning. The instructions for use, in particular the safety instructions, must be read carefully before using the product; keep the instructions for use in a safe place. Only use the product as described in these instructions for use to avoid accidental injury or damage. If you pass the VELARA upholstered bed on to a third party, these instructions for use must also be handed over.

2.6. Intended use

The product is of high quality, durable and intended or suitable exclusively for private use to a reasonable and customary extent. Furthermore, our product is **not** intended for commercial use. Commercial use is only permitted with the written consent of Home Deluxe GmbH.

The product is intended as a bed (sleeping accommodation) for indoor use.

Only use the product as described in these instructions for use. Any other use is considered improper and may result in damage to property or personal injury. The manufacturer accepts no liability for damage caused by improper or incorrect use.

2.7. General safety instructions

General hazard warnings



- Improper handling can lead to considerable personal injury and damage to property. For this reason, assembly, installation, commissioning, troubleshooting, maintenance and repair work may only be carried out by qualified persons.
- The product can be used by children aged from 8 years and above and persons with reduced physical, sensory or mental capabilities or lack of experience and knowledge if they have been given supervision or instruction concerning use of the appliance in a safe way and understand the hazards involved.
- **Only** install the product if the scope of delivery is complete and in perfect condition.
- Ensure that all parts are undamaged and correctly installed. There is a risk of injury if they are not installed correctly. Damaged parts can affect safety and function.
- Only place the product on a safe, level and firm surface.
- Do not make any changes to the product.
- Be careful when removing leaking batteries, never touch them directly by hand, use disposable or household gloves. If your skin comes into contact with the battery acid, you must wash your hands thoroughly.
- If the acid drips onto your clothes, they must be washed.
- Leaking battery residues can be cleaned with a damp cloth or cotton bud.
- Remove empty and leaking batteries from the product and dispose of them in accordance with legal regulations.
- The supply connections must not be short-circuited.

Danger for children



- Keep children away from packaging materials. There is a risk of suffocation!
- Keep children away from the product.
- Keep children away from the assembly site while the product is being assembled. The scope of delivery contains small parts that can be swallowed or cause serious injury.
- Children can injure themselves when playing with the product or when pulling up on the product.
- Do not place the product directly or in the immediate vicinity of a play area.
- Explain to the children how to use the product correctly and never leave them unsupervised while playing.
- Explain to the children how to handle the product correctly.
- Make sure that small children do not put small parts in their mouths.

Risk of injury

Improper handling of the product can lead to injuries



- Check the product for visible damage before each use.
- Do not make any design changes to the product. Any modifications must be authorized in writing by the manufacturer and carried out in accordance with the instructions.
- If the product is damaged, it must no longer be used. Damaged parts must be repaired or replaced with original spare parts.
- Ensure that the product is installed in a permanently stable manner to avoid injury.



- To avoid the risk of electric shock, all installations and corresponding maintenance work must be carried out by a qualified electrician.
- If the mains cable for the power supply is damaged, take the product out of operation until the mains cable is replaced by the manufacturer, its customer service or a qualified

electrician.

- **Danger to life due to electrical voltage**: There is an immediate danger to life if live parts are touched. Damage to the insulation or individual components can be life-threatening. If the insulation is damaged, switch off the power supply immediately and arrange for repairs.

Risk of damage



- Improper handling of the product can lead to damage.
- Repair and maintenance work on the electrical system may only be carried out by a qualified electrician.
- Do not open the packaging with sharp objects (e.g. knives, scissors or similar) as this may damage the product. Be careful when opening.
- If you open the packaging carelessly with a knife or other sharp objects, the product may be damaged. Be very careful when opening.
- Do not use the product near sources of heat or naked flames.
- **Caution:** Do not recharge non-rechargeable batteries under any circumstances.

Explosion hazard



- Do not store any highly flammable, combustible or explosive substances inside the product.
- **Caution**: Do not store highly flammable, combustible or explosive substances inside the product. Highly flammable substances can catch fire.

3. Product features

3.1. Technical data

VELARA	140 x 200	180 x 200 cm
Dimensions	160 x 220 cm	200 x 220 cm
Bed height (H)	36 cm	36 cm
Headboard height (H x W)	124 cm	124 cm
Foot height (H)	3 cm	3 cm
Drawer dimensions	70 x 50 x 12.5 cm	70 x 50 x 12.5 cm
Material	Wood Foam	Wood Foam
Weight	68 kg	73 kg
Max. Load capacity	350 kg	500 kg
Number of slatted frames	26 pieces	39 pieces
LED lighting		
Entrance height	230 V AC	
Frequency	50 / 60 Hz	
Output voltage	12 V DC	
Output power	8 W	
Protection class	III	
Remote control		
Transmission frequency	433 MHz	
Tension	3 V DC	
Battery[1)]	CR2025	

1) Not included in the scope of delivery

4. Scope of delivery

Check the packaging for external damage on delivery. Furthermore, immediately after unpacking, check that the scope of delivery is complete and that the product and all components are in perfect condition. Only assemble the product if the scope of delivery is complete and undamaged.

Scope of delivery (140 x 200 cm)

No.	Description	Quantity	Illustration
1	Top headboard	1	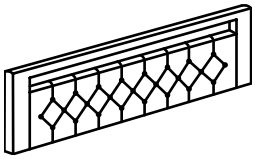
2	Bottom headboard	1	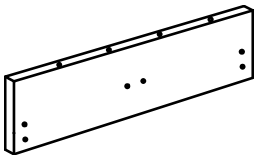
3	Foot section	1	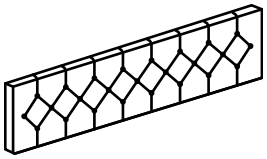
4	Side panel	2	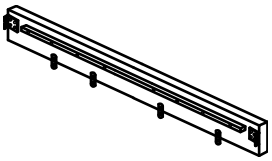
5	Cross brace	1	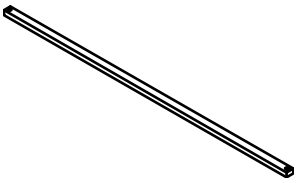
6	Center strut	1	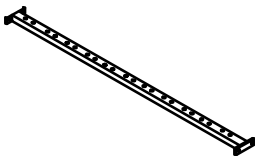
7	Drawer side	8	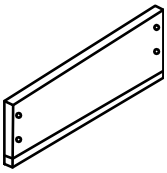
8	Front drawer	4	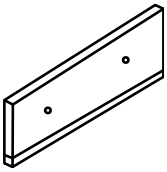
9	Rear drawer	4	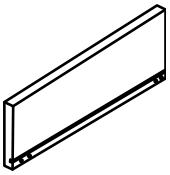

No.	Description	Quantity	Illustration
10	Roller support strip	8	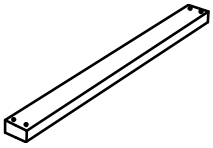
11	Drawer front	4	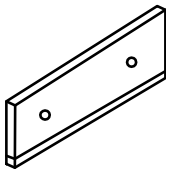
12	Drawer bottom	4	
13	Support foot	2	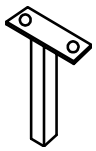
14	Spring wood strip	26	
15	Last holder	26	
16	Center last holder	13	
17	Role	16	
18	Foot	4	
19	Connection cable	1	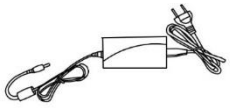
20	Remote control	1	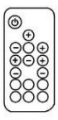
21	Spring washer	8	
22	Nut M8	6	
23	M8x30 screw	20	

No.	Description	Quantity	Illustration
24	M8x35 screw	4	
25	Wrench	1	
26	M8x50 screw	6	
27	M4x13 screw	48	
28	M4x40 screw	68	
29	Washer	20	
30	Furniture connectors	64	
31	Screwdriver	1	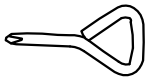
32	Allen key	1	

Scope of delivery (180 x 200 cm)

No.	Description	Quantity	Illustration
1	Top headboard	1	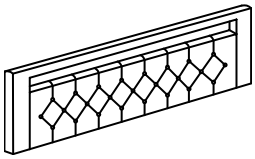
2	Bottom headboard	1	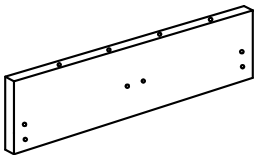
3	Foot section	1	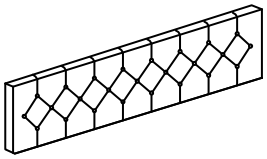
4	Side panel	2	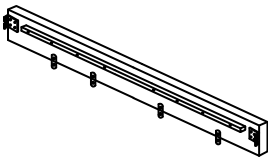
5	Cross brace	1	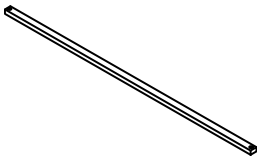
6	Center strut	2	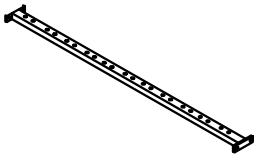
7	Drawer side	8	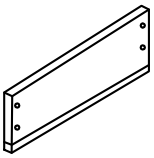
8	Front drawer	4	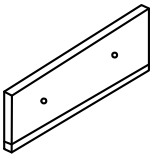
9	Rear drawer	4	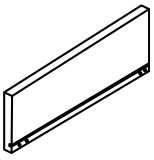
10	Roller support strip	8	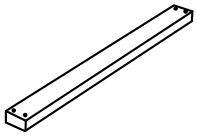

No.	Description	Quantity	Illustration
11	Drawer front	4	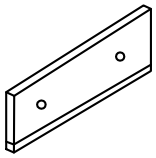
12	Drawer bottom	4	
13	Support foot	4	
14	Spring wood strip	39	
15	Last holder	26	
16	Center strip holder	26	
17	Role	16	
18	Foot	4	
19	Connection cable	1	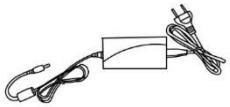
20	Remote control	1	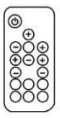
21	Spring washer	8	
22	Nut M8	10	
23	M8x30 screw	24	
24	M8x35 screw	8	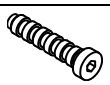
25	Wrench	1	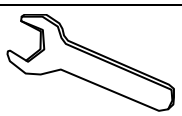
26	M8x50 screw	6	
27	M4x13 screw	48	

No.	Description	Quantity	Illustration
28	M4x40 screw	68	
29	Washer	20	
30	Furniture connectors	64	
31	Screwdriver	1	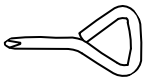
32	Allen key	1	

Note: The roll-up slatted frame is located in the headboard

5. Assembly

5.1. Safety instructions

All health and safety information must be read.

Risk of injury
Improper handling during installation can lead to injuries

- Your product will be delivered in several packages. Please make sure that the packages are opened at the top. Be very careful when opening the parcels as there are fragile parts and glass in the parcels.
- Avoid damp or heavily soiled rooms as installation locations.
- Only place the product on a safe, level and firm surface that can withstand the load permanently.
- Operating errors, assembly errors or damage caused by assembly are excluded from the warranty.
- At least 2 people are required to assemble the product.
- Wear protective clothing such as safety shoes and protective gloves during assembly.

5.2. Structure of the product

The product is delivered disassembled and can be assembled with little effort. Follow the assembly instructions carefully. If the instructions are not followed, the function and safety of the product cannot be guaranteed.

Tools required

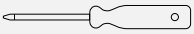	Screwdriver	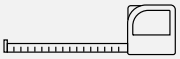	Measuring tape
	Pencil	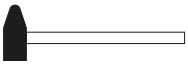	Hammer
	Allen key		Cutter knife

- The following instructions must be read carefully.
- The accessories are located in the head section of the product.

Structure (140 x 200 cm)

Illustration	Description
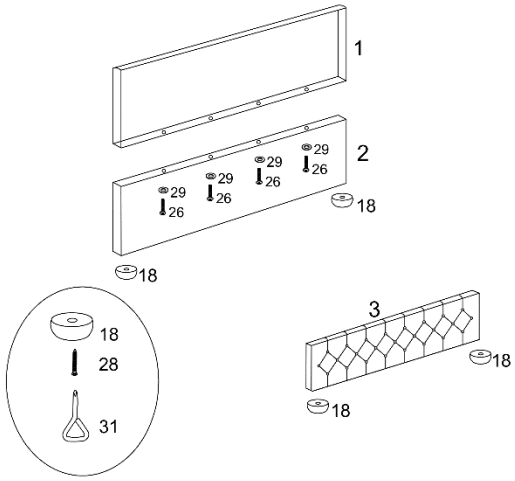	**Step 1:** Screw the two headboards together at the top **(1)** and bottom **(2)** using the screws **(26)** and washers **(29)**. Then screw the feet **(18)** to the head and foot sections using the screws **(28**).
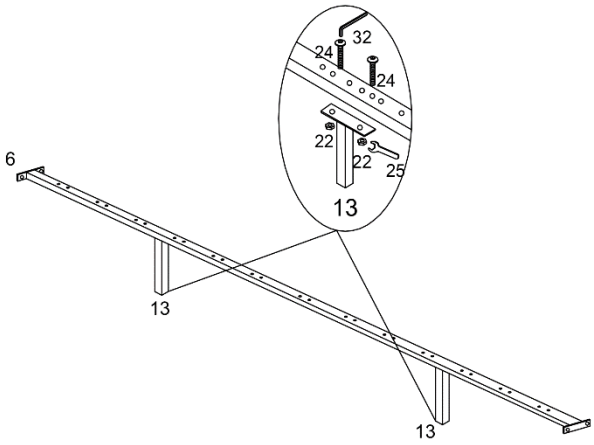	**Step 2:** Screw the two support feet (**13**) to the center strut (**6**) using the screws (**24**) and nuts (**22**).
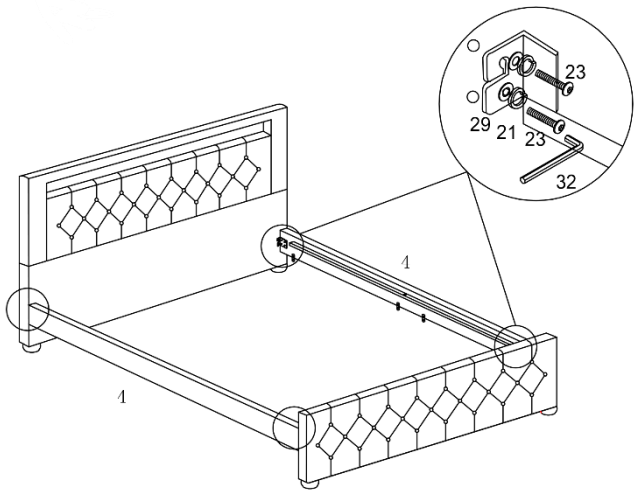	**Step 3:** Screw both side sections to the head and foot sections using the screws **(23)**, spring washer **(21)** and washers **(29)**.

Illustration	Description
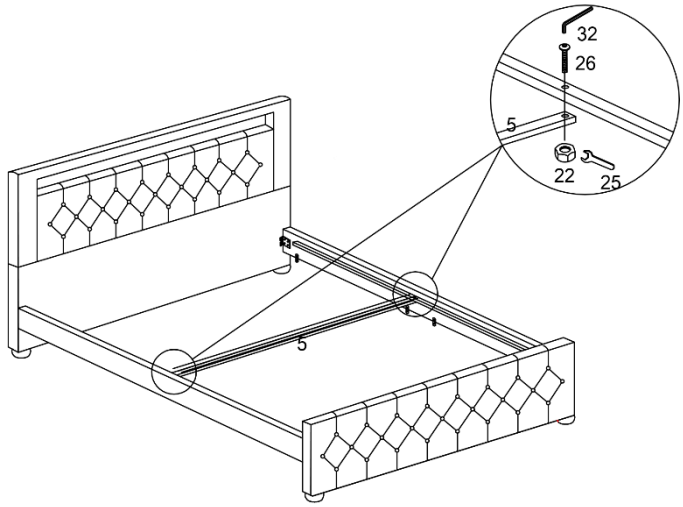	**Step 4:** Attach the cross strut **(5)** using the screws **(26)** and nuts **(22)** and tighten them.
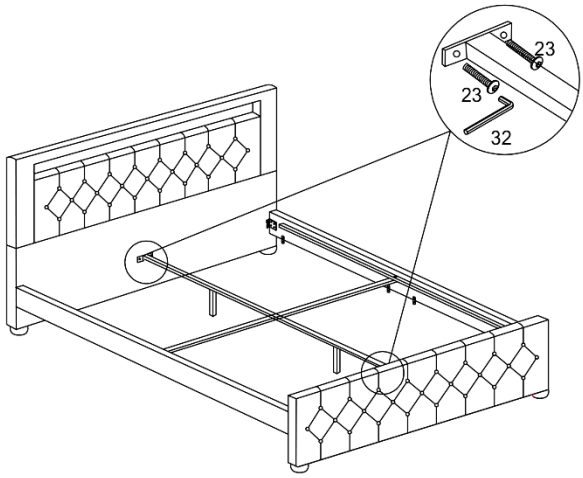	**Step 5:** Attach the center strut (**6**) with the screws (**23**) and tighten them.

Illustration	Description
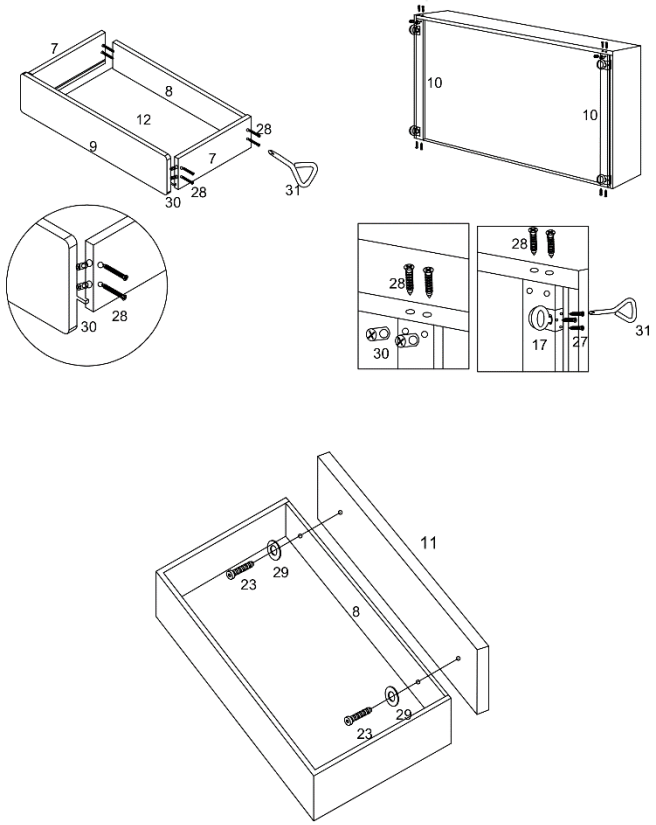	**Step 6**: Fit the furniture connectors (**30**) in the drawer sides. Assemble the drawer with the components (**7, 8, 9, 12**), making sure that the drawer base (**12)** is fitted into the grooves of the drawer components (**7, 8, 9**). Screw all components together with the screws (**28**). Fit the furniture connectors (**30**) into the drawer strut (**10**). Slide the drawer brace (**10**) on the sides, between the drawer back panel (**9**) and drawer front (**8**) and screw it in place with the screws (**28**). Fit the castors (**17**) to the drawer struts (**10**) using the screws (**27**). Fit the front drawer lining (**11**) to the drawer front using the screws (**23**) and washers (**29**).
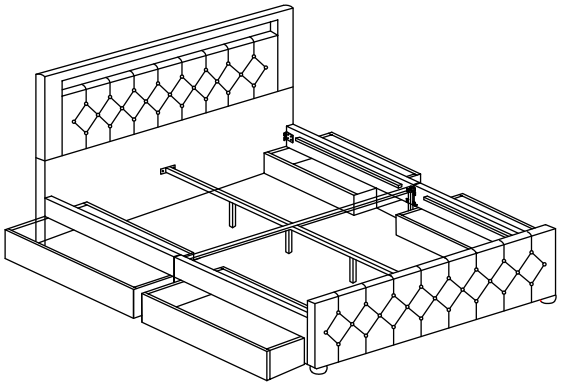	**Step 7:** Slide in the finished drawers.

Illustration	Description
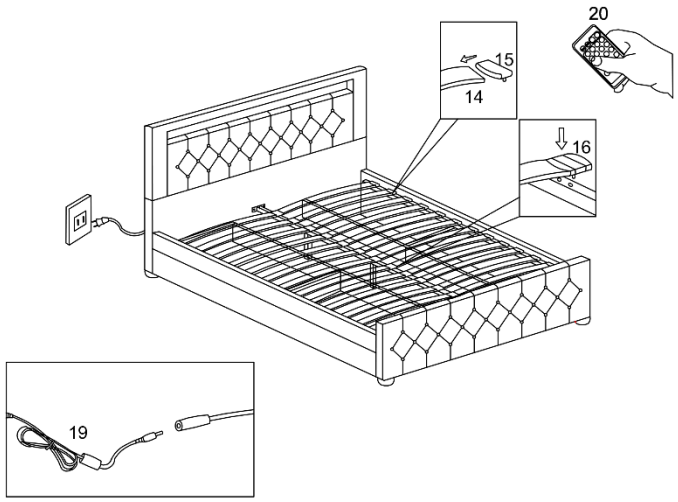	**Step 8:** Push the slat holders **(15), (16)** onto the outer slats**.** Then insert the tongue-and-groove wooden slat (**14**) into the slat holder. **Attention! The curvature of the wooden slat must point upwards.** Plug the connection cable **(19)** into the power supply. The remote control **(20)** can be used to switch the light on or off and change the color. **Note**: The roll-up slatted frame is located in the headboard

Structure (180 x 200 cm)

Illustration	Description
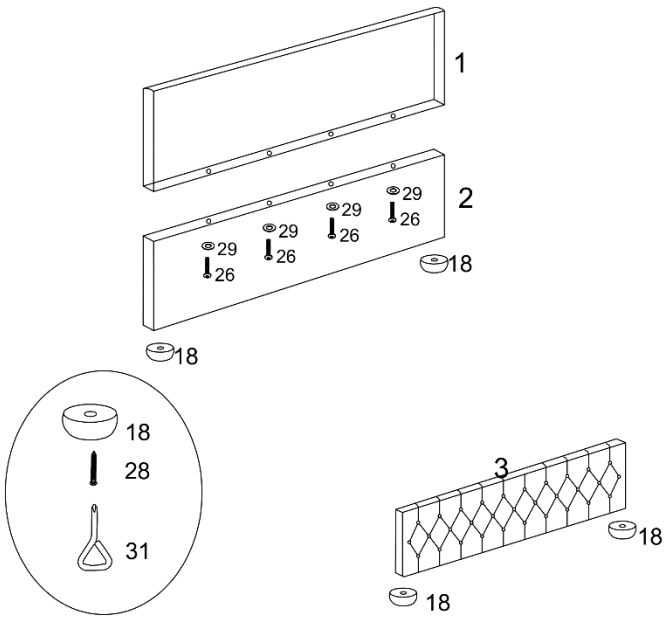	**Step 1:** Screw the two headboards together at the top **(1)** and bottom **(2)** using the screws **(26)** and washers **(29)**. Then screw the feet **(18)** to the head and foot sections using the screws **(28)**.
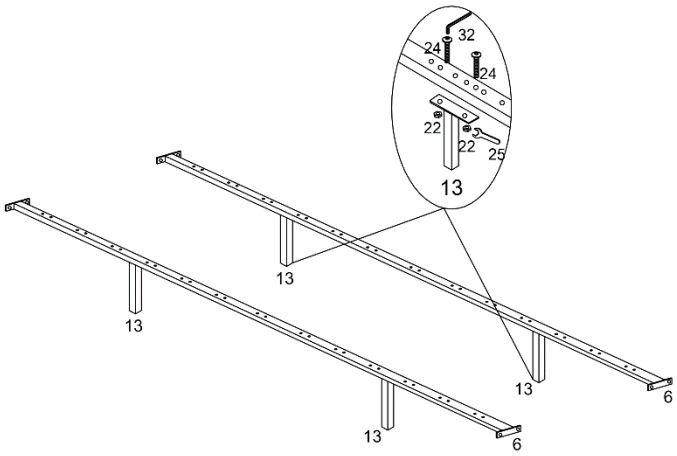	**Step 2:** Screw the support feet (**13)** to the center strut (**6**) using the screws (**24**) and nuts (**22)**.
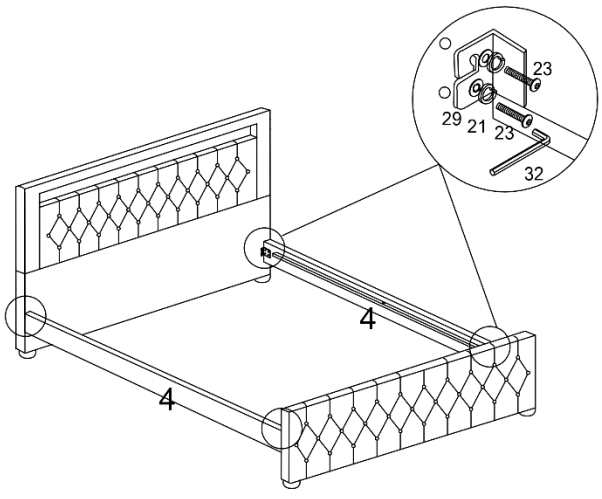	**Step 3:** Screw both side sections to the head and foot sections using the screws **(23)**, spring washer **(21)** and washers **(29)**.

Illustration	Description
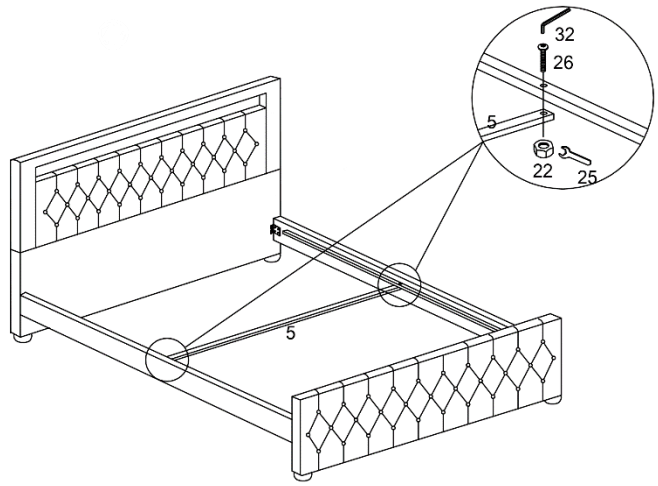	**Step 4:** Attach the cross strut (**5**) using the screws (**26**) and nuts (**22**) and tighten them.
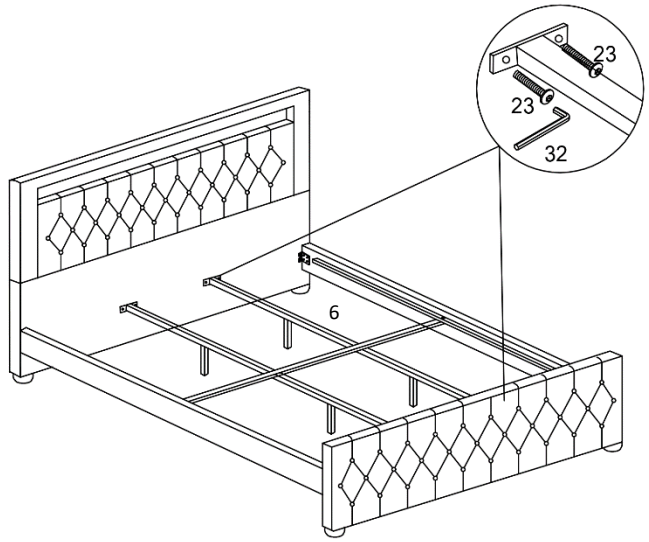	**Step 5:** Attach the center strut (**6**) with the screws (**23**) and tighten them.

Illustration	Description
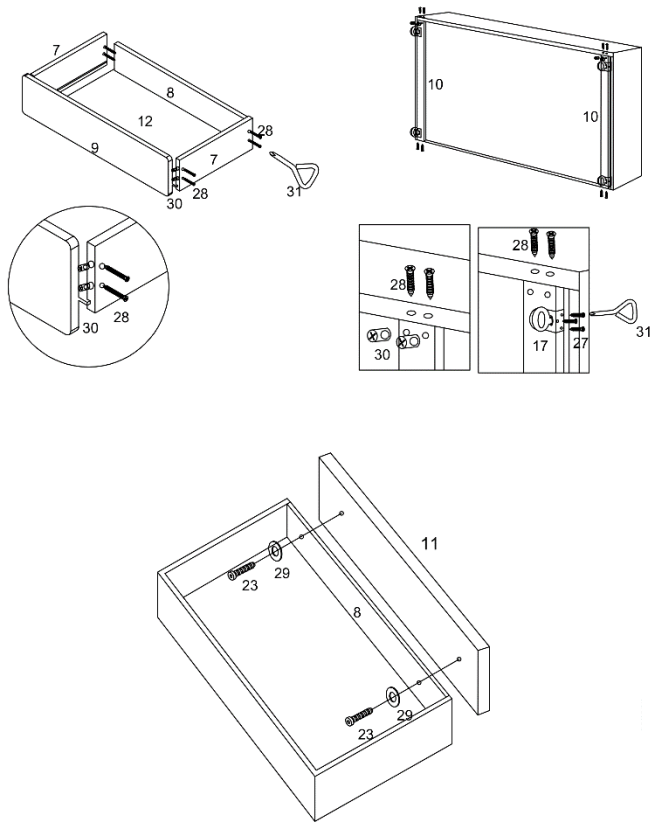	**Step 6:** Fit the furniture connectors (**30**) in the drawer sides. Assemble the drawer with the components (**7, 8, 9, 12**), making sure that the drawer base (**12)** is fitted into the grooves of the drawer components (**7, 8, 9**). Screw all components together with the screws (**28**). Fit the furniture connectors (**30**) into the drawer strut (**10**). Slide the drawer brace (**10**) on the sides, between the drawer back panel (**9**) and drawer front (**8**) and screw it in place with the screws (**28**). Fit the castors (**17**) to the drawer struts (**10**) using the screws (**27**). Fit the front drawer lining (**11**) to the drawer front using the screws (**23**) and washers (**29**).
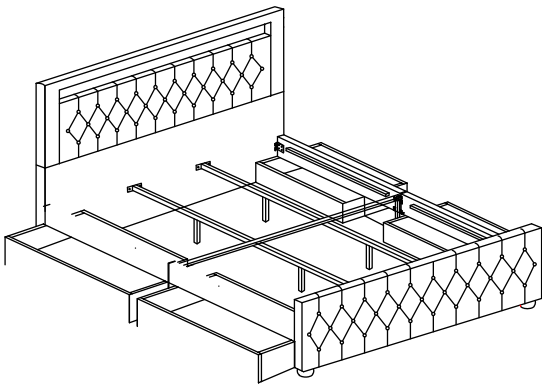	**Step 7:** Slide in the finished drawers.

Illustration	Description
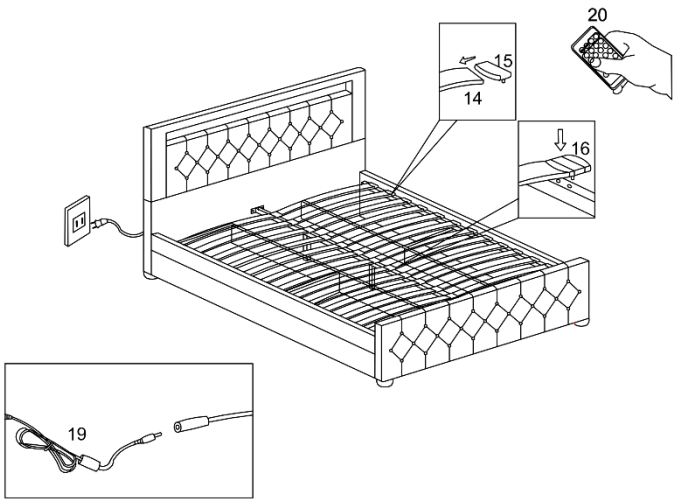	**Step 8:** Push the slat holders **(15), (16)** onto the outer slats**.** Then insert the tongue-and-groove wooden slat (**14**) into the slat holder. **Attention! The curvature of the wooden slat must point upwards.** Plug the connection cable **(19)** into the power supply. The remote control **(20)** can be used to switch the light on or off and change the color. **Note**: The roll-up slatted frame is located in the headboard

6. Application

6.1. Safety instructions

The following health and safety information must be read carefully.

Risk of injury
Improper handling during operation can lead to injuries



- Do not use a damaged product.
- Do not make any changes to the product.
- Check the screws at regular intervals.

6.2. Initial commissioning

Check the product for damage before using it for the first time. The product may only be used if it is undamaged.

6.3. Operation

Check before using the product,

- the proper condition.
- the electrical connection.
- all functions on the hand-held transmitter.
- the function of the LEDs.

6.4. Control element

Handheld transmitter

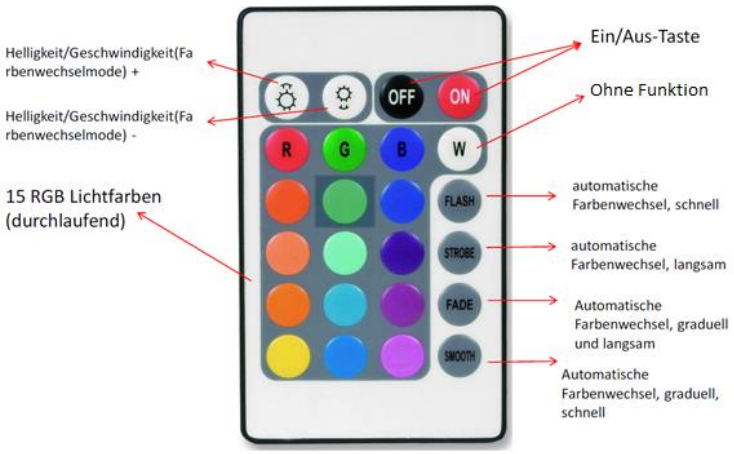

The included RGB LED lighting is used exclusively for scene/accent lighting and is not suitable for other applications.

Connecting LED lighting

Make sure that the arrows are aligned correctly when connecting the control box and the LED lighting.

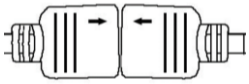

Inserting / changing the battery in the hand-held transmitter

- Open the battery compartment and pull it out.
- Insert the battery into the hand-held transmitter, paying attention to the correct polarity (+/-). (The CR2025 battery is not included in the scope of delivery).
- Slide the battery compartment back into the hand-held transmitter.

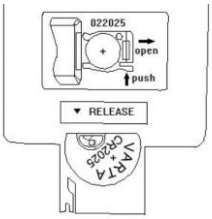

Replace LED lighting in the headboard

The LED lighting in the headboard must **not** be replaced.

7. Troubleshooting

If the following faults occur during operation, please check the following fault causes using the following table. If the fault cannot be rectified by the measures listed, take the product out of operation.

Error	Possible cause	Solution
The product wobbles or vibrates	- The product stands on uneven surfaces - The fastening screws have come loose - The product is overloaded	- Place the product on a level surface - Tighten the fastening screws - Comply with load limits
The mattress does not fit in the product	- Mattress is large or too small	- Use the right size mattress
Hand-held transmitter does not work	- Battery is empty - No battery inserted - Distance to receiver too great	- Insert new battery - Insert battery - Reduce the distance to the receiver
LED does not switch on or off	- No mains voltage available - LED defective - Hand-held transmitter does not work - Distance to receiver too great	- Check power supply - Contact customer service - Insert new battery - Hand-held transmitter defective - Reduce the distance to the receiver

8. Maintenance and care

8.1. Safety instructions

Risk of injury
Improper handling during operation can lead to injuries



- The power supply to the product must be switched off before cleaning/maintenance/care.
- Our upholstered bed is extremely easy to care for and we recommend cleaning the surface with a soft cloth or slightly damp cloth only.
- The surface is suitable for daily use and requires no additional treatment in the long term.
- In principle, all dirt and liquids (e.g. drinks) should be wiped off immediately with a slightly damp cloth.
- The power cable from the product may only be replaced with the same type of cable supplied by the manufacturer. Contact the manufacturer.
- Cleaning and maintenance must not be carried out by children.
- Defective LED lighting must not be replaced.

9. Dismantling

9.1. Safety instructions

Risk of injury
Improper handling during disassembly can lead to injuries



- Disconnect the product from the power supply before dismantling. Contact with live

components can result in an electric shock, which can cause burns or death.
- The product has large dimensions, at least 2 people are required for disassembly.
- Secure the product against falling before dismantling.

Disassembly of the product must be carried out in reverse order to assembly. (**see chapter Assembly**)

10. Waste disposal

10.1. Safety instructions

Risk of injury Improper handling of batteries containing lithium



- Used batteries containing lithium pose a high risk of fire. Therefore, special attention must be paid to the proper disposal of used batteries and accumulators containing lithium. Incorrect disposal can also lead to internal and external short circuits due to thermal effects (heat) or mechanical damage. A short circuit can lead to a fire or explosion and have serious consequences for people and the environment. Therefore, tape the terminals of lithium-containing batteries and rechargeable batteries before disposal to prevent an external short circuit.
- Consumers are legally obliged to take all batteries and rechargeable batteries, regardless of whether they contain harmful substances or not, to a collection point in their municipality/district or to a retailer so that they can be disposed of in an environmentally friendly manner and valuable raw materials can be recovered.

10.2. General information



- Dispose of the product and all components in accordance with local and country-specific regulations to prevent damage to the environment.
- Our packaging is made from environmentally friendly materials. They can be recycled and thus serve as valuable raw materials. Dispose of the packaging material (cardboard, dirty packaging, etc.) separately and properly in accordance with the applicable national regulations.
- Contact our customer service if you are unsure about disposal.
- You can also obtain information on proper disposal from the local waste disposal centers.

Electrical and electronic equipment - Information for private households

The Electrical and Electronic Equipment Act (ElektroG) contains a large number of requirements for the handling of electrical and electronic equipment. The most important ones are summarized here.

1. Separate collection of old appliances

Electrical and electronic appliances that have become waste are referred to as old appliances. Owners of old appliances must dispose of them separately from unsorted municipal waste. They must separate used batteries and accumulators that are not enclosed in the old appliance, as well as lamps that can be removed from the old appliance without destroying them, from the old appliance without destroying them before handing them in at a collection point. Separate old appliances in order to prepare them for reuse.

2. Batteries and rechargeable batteries



As a rule, owners of waste appliances must separate waste batteries and accumulators that are not enclosed by the waste appliance before handing them in at a collection point. This does not apply if the waste equipment is handed in to public waste management authorities and separated there from other waste equipment for the purpose of preparing it for reuse.

3. Options for returning old appliances

Owners of old appliances from private households can hand them in at the collection points of the public waste disposal authorities or at the take-back points set up by manufacturers or distributors in accordance with the ElektroG. An online list of collection and take-back points can be found on the website: https://www.stiftung-ear.de or https://www.take-e-back.de.

4. Data protection notice

Old devices often contain sensitive personal data. This applies in particular to information and telecommunications technology devices such as computers and smartphones. In your own interest, please note that each end user is responsible for deleting the data on the old devices to be disposed of.

5. Take-back obligation of distributors

Distributors with a sales area for electrical and electronic equipment of at least 400 m^2 and food distributors with a total sales area of at least 800 m^2 who offer and make available electrical and electronic equipment on the market several times per calendar year or on a permanent basis are obliged to do so,

- when supplying a new electrical or electronic appliance to an end user, to take back free of charge at the place of supply or in the immediate vicinity an old appliance of the end user of the same type that essentially fulfills the same functions as the new appliance, and
- at the request of the end user, to take back old appliances that do not exceed 25 cm in any external dimension free of charge in the retail store or in the immediate vicinity; the take-back may not be linked to the purchase of an electrical or electronic appliance and is limited to three old appliances per type of appliance.

6. Meaning of the "crossed-out dustbin" symbol



The symbol of a crossed-out dustbin regularly shown on electrical and electronic appliances indicates that the appliance in question must be collected separately from unsorted municipal waste at the end of its service life.

- Manufacturer registration number

As a manufacturer within the meaning of the ElektroG, we are registered with the responsible Stiftung Elektro-Altgeräte Register (Nordostpark 72, 90411 Nuremberg) under the following registration number: WEEE-Reg. No. DE86467979

Home Deluxe GmbH
Schanzeweg 2
32312 Lübbecke
Germany
Tel: +49 (0)5743 6181-0
www.home-deluxe-gmbh.de

GA-147-00_VELARA
2023/10